west elm

bookshelf console

assembly instructions

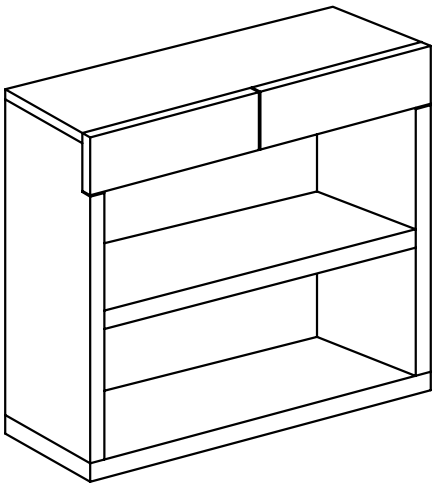

! Tools required: 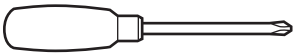

! Do not throw away packaging materials until assembly is complete.

! Assemble this item on a soft surface, such as cardboard or carpet, to protect finish.

! Proper assembly of this item requires 2 people.

A

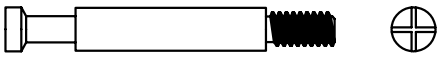

Cam 8x

B

Cam tunnel 8x

C

Cam lock 8x

D

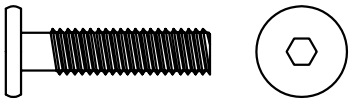

Bolt(Ø 5/16"*1 1/4") 2x

E

Bolt(Ø 5/16"*3") 4x

F

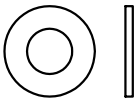

Metal washer 6x

G

Lock washer 6x

H

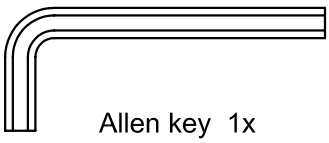

Allen key 1x

I

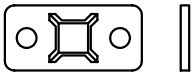

Mounting Bracket 2x

J

Short Screw 2x

K

Nylon Restraint Strap 1x

L

Long Screw 2x

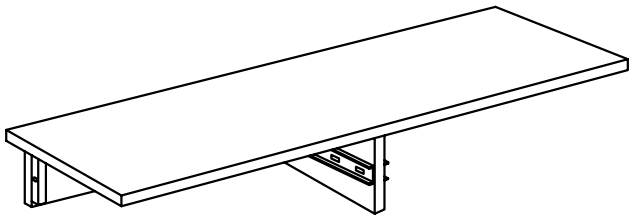

top panel

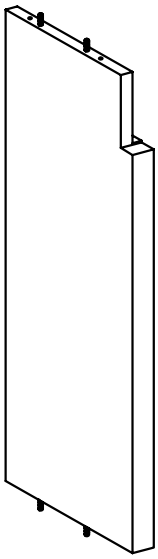

left side panel

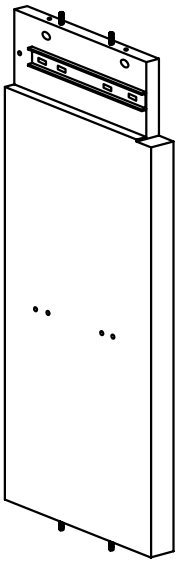

right side panel

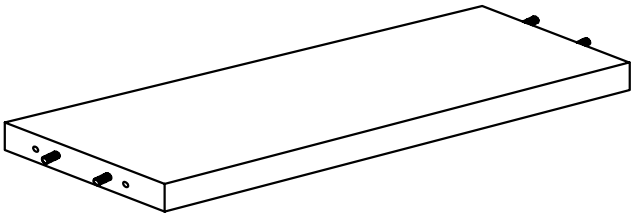

shelf

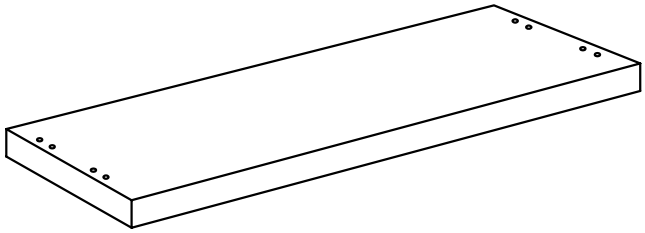

bottom panel

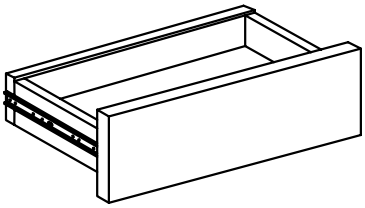

left drawer

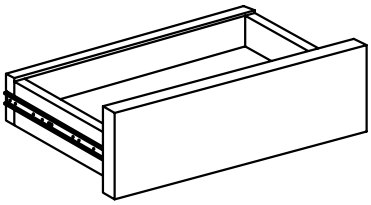

right drawer

1. Fasten cams (A) into threaded holes in top panel, left side panel, and right side panel as shown. Tighten cams with a phillips screwdriver.

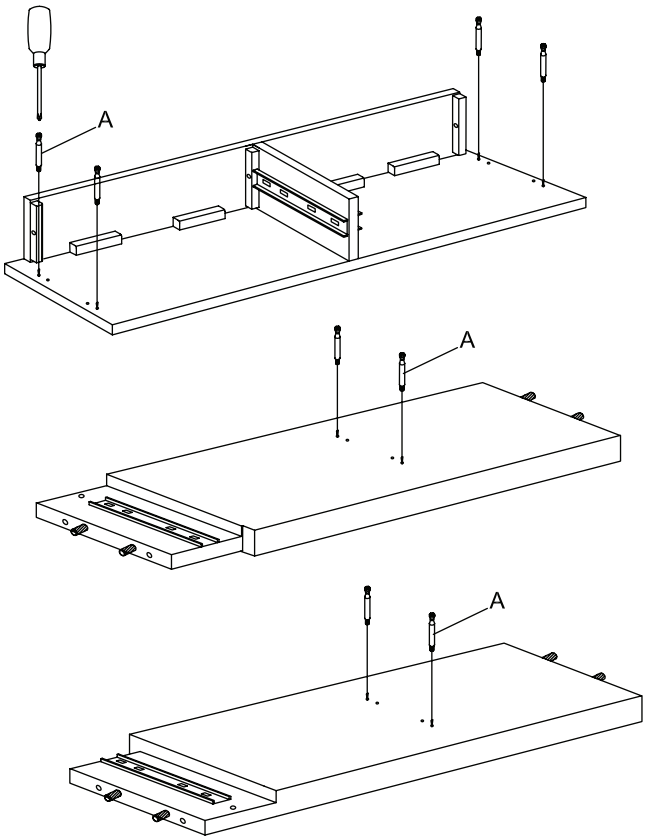

2. Fasten shelf to side panels using cam tunnels (B) and cam locks (C) as shown. Tighten cam locks with a phillips screwdriver.

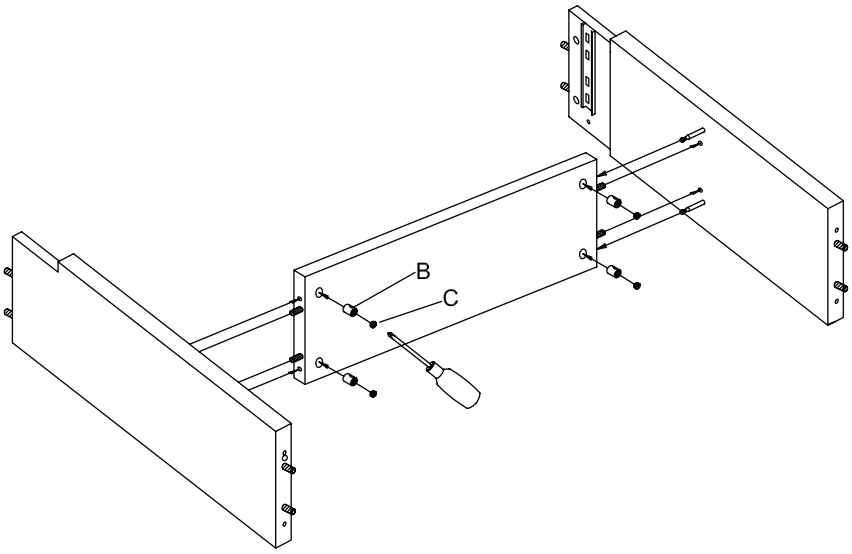

3. Fasten side panels to bottom panel using metal washers (F), lock washers (G), and bolts (E) in order as shown. Tighten bolts using allen key (H).

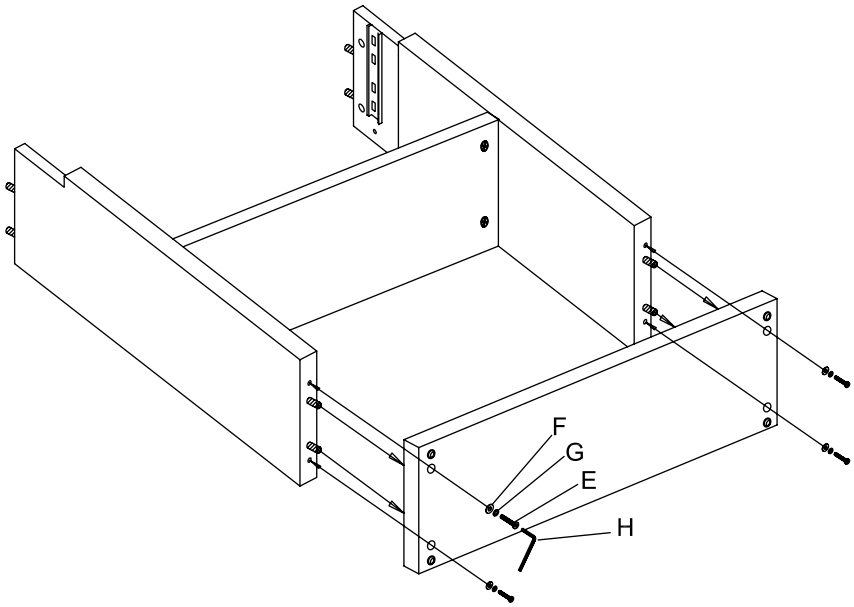

4. Fasten top to sides as shown. Set top cams through holes in sides into cam tunnels (B) and tighten with cam locks (C) using phillips screwdriver. Then fasten through blocks in back using metal washers (F), lock washers (G), and bolts (E) in order as shown. Tighten bolts using allen key (H).

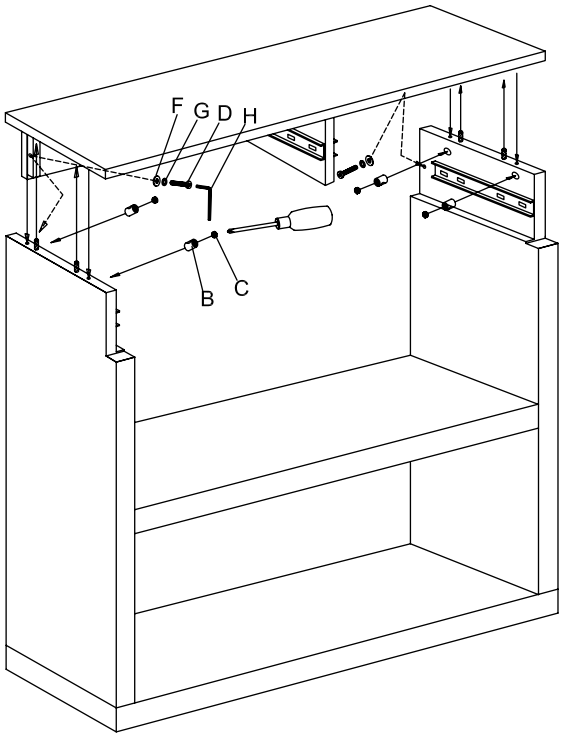

5. Insert drawers into top panel.

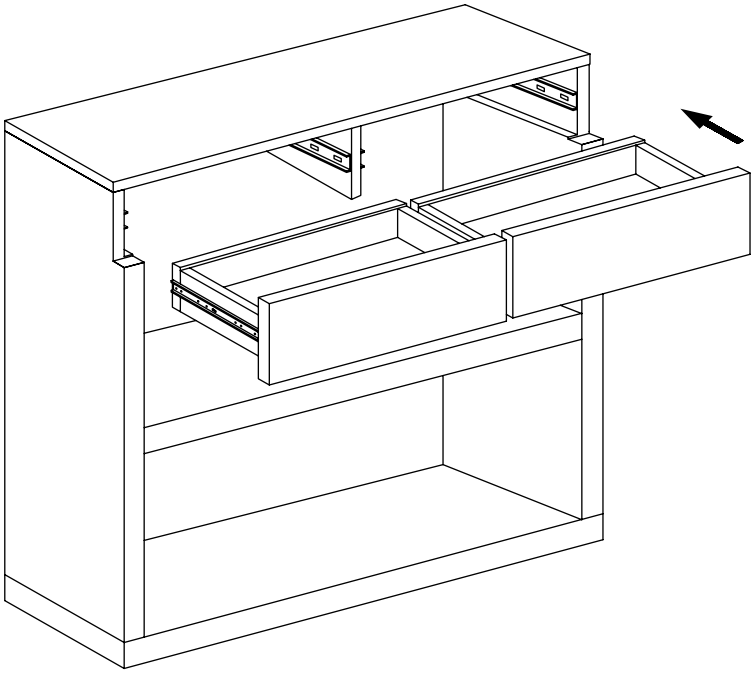

CARE INSTRUCTION

Hardware may loosen over time. Periodically check that all connections are tight.

Wipe with a soft, dry cloth. To protect finish, avoid the use of chemicals and household cleaners.

OVERBALANCE

To prevent injury and property damage from unexpected tipping of furniture, we highly recommend installation of the two (2) sets of overbalance protection hardware included with this product.

1. Attach the two mounting brackets (I) horizontally to the top back edge of the furniture. Insert the short screws (III) through the holes in the bracket (I) and tighten securely using screwdriver.

2. Determine where the furniture is to be placed and mark location on the wall for the other two mounting bracket screw holes. It should be placed approximately 2" below the bracket mounted to the furniture.

3. Attach the two mounting brackets (I) vertically to the wall by inserting the long screws (IV) provided through the holes in the bracket and tightening securely using screwdriver.

4. Place the furniture so the brackets (I) on the back edge are in line with the brackets (I) on the wall.

5. Lace an end of the nylon restraint strap (II) down through each bracket (I). Bring both ends together and slide the thin end of the strap through the receiving end of the strap until snug.

6. Check to make sure the strap is securely laced and locked to the brackets.
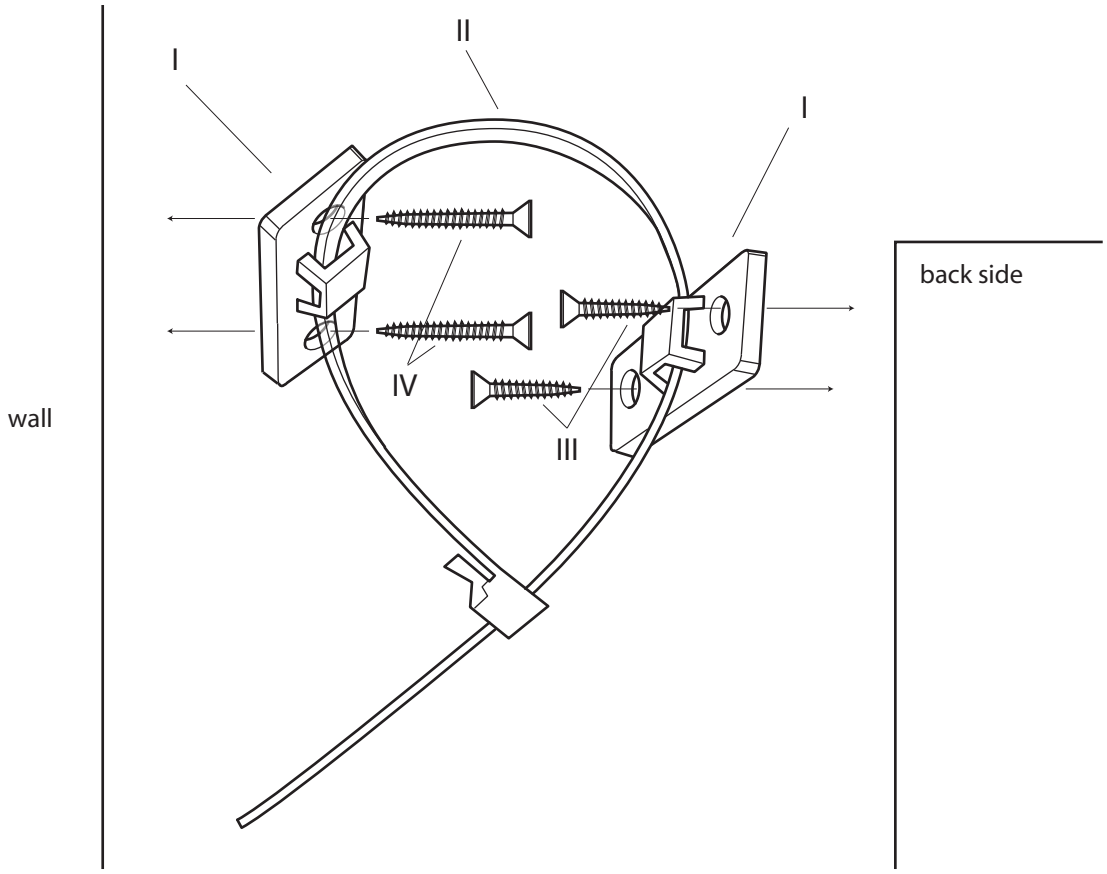
7. Repeat steps 5 and 6 for the second bracket set.