west elm: deep picture ledge

mounting instructions

NOTE:

- Stud mounting is recommended wherever possible. Use proper hardware for your wall type (such as anchors for drywall). When in doubt, consult your local hardware store. For your safety, installation by two people is recommended.
- Designed to be used for decorative items only.
- Maximum load on 3' shelf is 20lbs stud mounted/15lbs drywall mounted
  Maximum load on 4' shelf is 20lbs stud mounted/15lbs drywall mounted
- Wipe with a soft, dry cloth. To protect the finish, avoid the use of all chemicals and household cleaners.

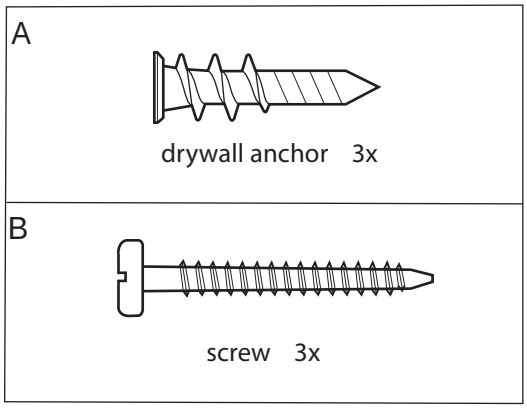

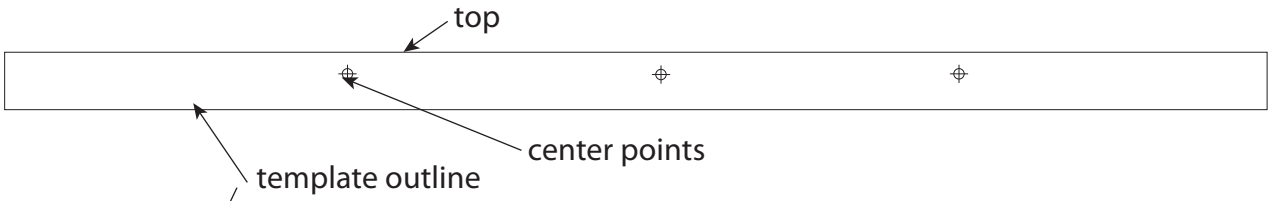

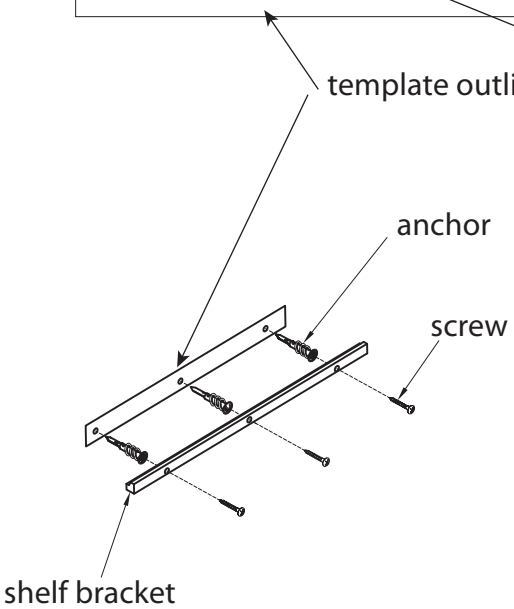

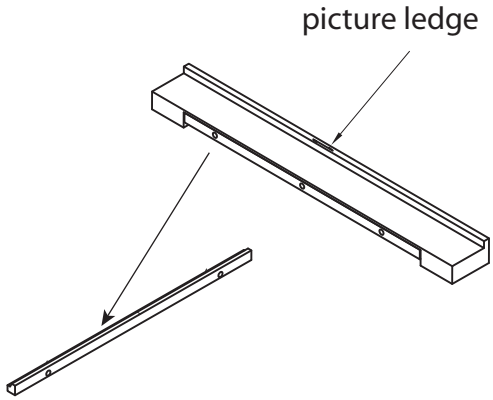

! For drywall mounting, use anchors with screws.
For stud mounting, use screws only.

1. This shelf comes with a paper template which can be used to locate the position of the shelf on your wall and mark the insertion points of the mounting hardware. The template outline indicates the line of the shelf edge at the wall. The centerpoints are toward the top of the shelf and indicate the point of insertion for the drywall anchors and screws.

2. Temporarily tape the template to the wall with the outline indicating the desired location of the shelf. Use a carpenter's level to make sure the shelf edges are level.

3. Using a pin, poke throught the template into the drywall at the center points to mark the locations on the wall. Remove the template.

4. For stud mounting, skip to step 5. For drywall mounting: using a philip's head screwdriver, insert the drywall anchors (A) into the wall at the insertion points. Turn clockwise until anchors are flush with the wall.

5. Insert screws through the shelf bracket into the anchors or directly into studs at the insertion points and tighten until firmly secure.

6. Align picture ledge with shelf bracket and slide shelf down until securely fastened to bracket.